Forma costruttiva - Mounting position IM **B3**

63 ... 160S

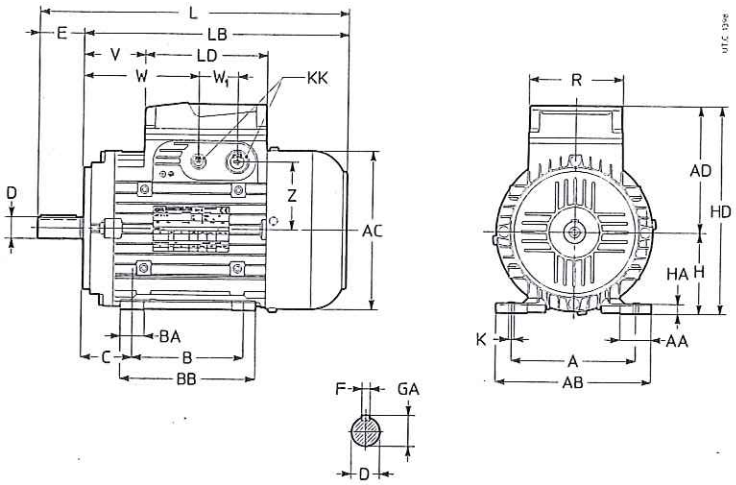

Grand. motore Motor size		AC	AD	L	LB	LD	KK	R	V	W	W_1	Z	Estremità d'albero - Shaft end D			E	F	GA	Piedi - Feet A	AB	B	C	BB	BA	AA	K	HA	H[4]	HD
		Ø					2)						Ø		1)		h9												
63	B3	123	95	228	205	103	4xM16	86	29	69	36	45	11	j6	M4	23	4	12,5	100	120	80	40	100	21	27	7	9	63	158
71	B3	138	112	254	224		2xM16 + 2xM20		47	87		62	14	j6	M5	30	5	16	112	138	90	45	110	22	28		10	71	183
80	B3	156	121	282	242				59	99		71	19	j6	M6	40	6	21,5	125	152	100	50	125	26		9		80	201
90 S[5]	B3	176	141	316	266	136	2xM16 + 2xM25	106	39		43	75	24	j6	M8	50	8	27	140	174		56			35		11	90	230
90 L	B3			346	296				69	129											125		150						251
100	B3	194	151	380	320				82	142		86	28	j6	M10	60	8	31	160	196	140	63	185	40	37	12	12	100	275
112	B3	218	163	403	343				100	160		98							190	226		70			50		15	112	264
132 S[6]	B3	257	194	479	399	190	2xM16 + 2xM32	148	78	166	55	109	38	k6	M12	80	10	41	216	257	140[3]	89	210	42	52	14	17	132	326
132 M[6]	B3																				178[3]								
132 MA[7] ... MC	B3			539	459				138	226											178								
160 S	B3			588	478				157	245			42	k6	M16	110	12	45	254	294	210	108	246	45			20	160	354

1) Foro filettato in testa.
2) Predisposizione per accesso cavi su entrambi i lati (2 fratture prestabilite per ogni lato, pressacavo non fornito).
3) Il piede del 132S riporta anche un interasse di 178 mm e quello del 132M riporta anche un interasse di 140mm.
4) Tolleranza $_{-0,5}^{0}$ mm.
5) Per motore **HB3V 90S 2** e **HB3V 90 S4** quote come grand. motore 90L.
6) Per motore **HB3V 132SB 2, HB3V 132 SC2** e **HB3V 132S 4** quote come grand. motore 132 MA ... MC.
7) Per motore **HBV 132MA 2** quote come grand. motore 132S.

1) Tapped butt-end hole.
2) Prearranged cable entry knockout openings on both sides (two openings on each side, cable gland and plugs not supplied).
3) Foot of 132S also has a centre distance of 178 mm and the one of size 132M has also a centre distance of 140mm.
4) Tolerance $_{-0,5}^{0}$ mm.
5) For motors **HB3V 90S 2** and **HB3V 90 S4** dimensions are the ones as sizes 90L.
6) For motors **HB3V 132SB 2, HB3V 132 SC2** and **HB3V 132S 4** dimensions are the ones as sizes 132 MA ... MC.
7) For motor **HBV132 MA 2** dimensions are the same ones of size 132S.